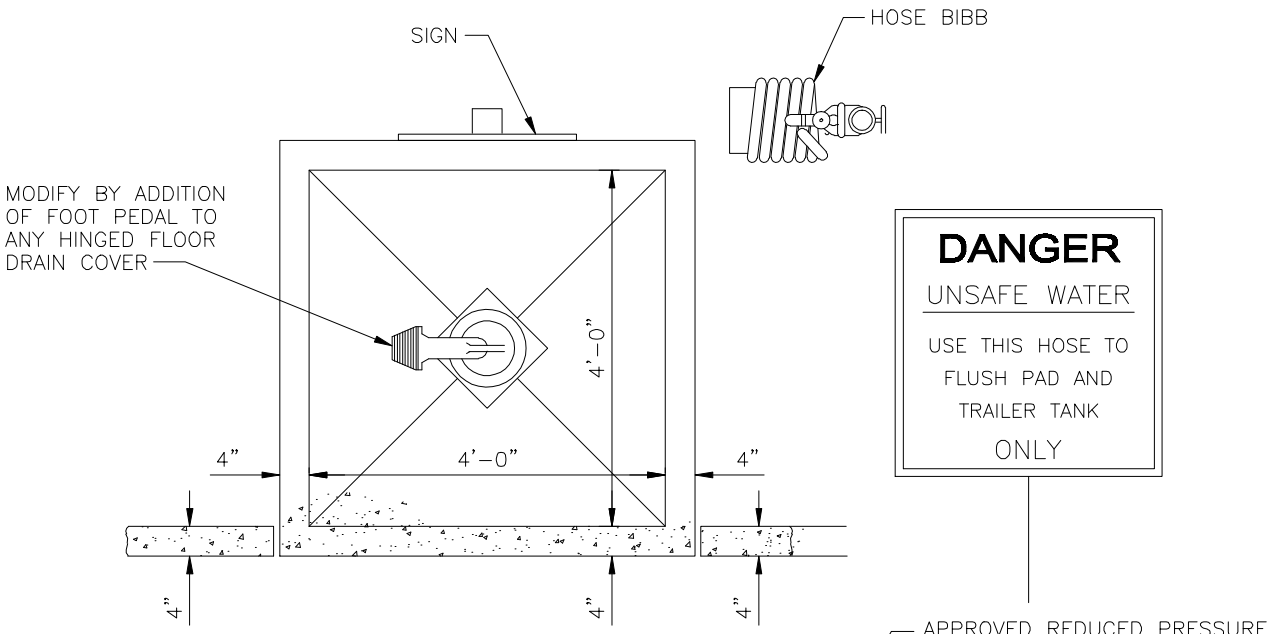

PLAN VIEW

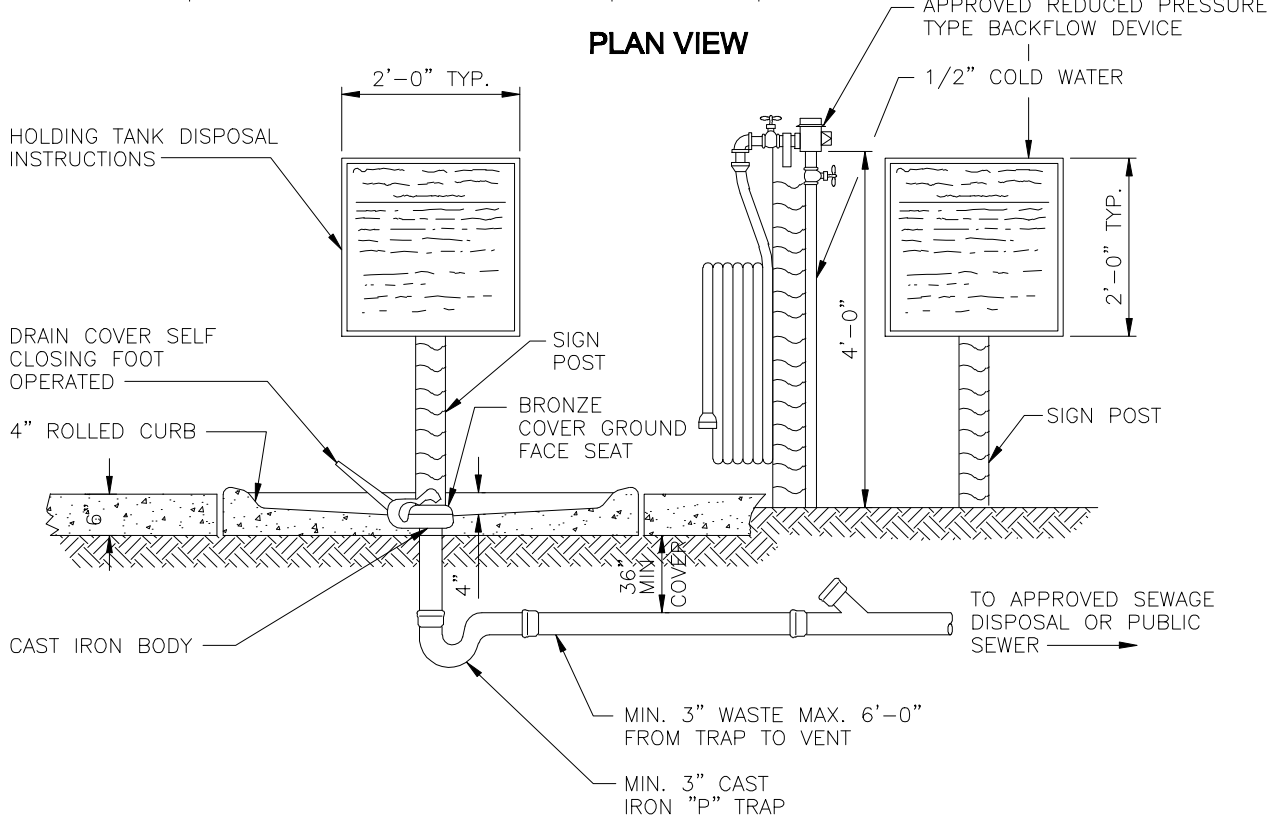

ELEVATION

PICO WATER DISTRICT

	APPROVED TRAILER SEWAGE DISPOSAL STATION APP. mjgrajeda MARK J. GRAJEDA GENERAL MANAGER	STANDARD DRAWING NUMBER **W-33** DATE: SEPT 2008